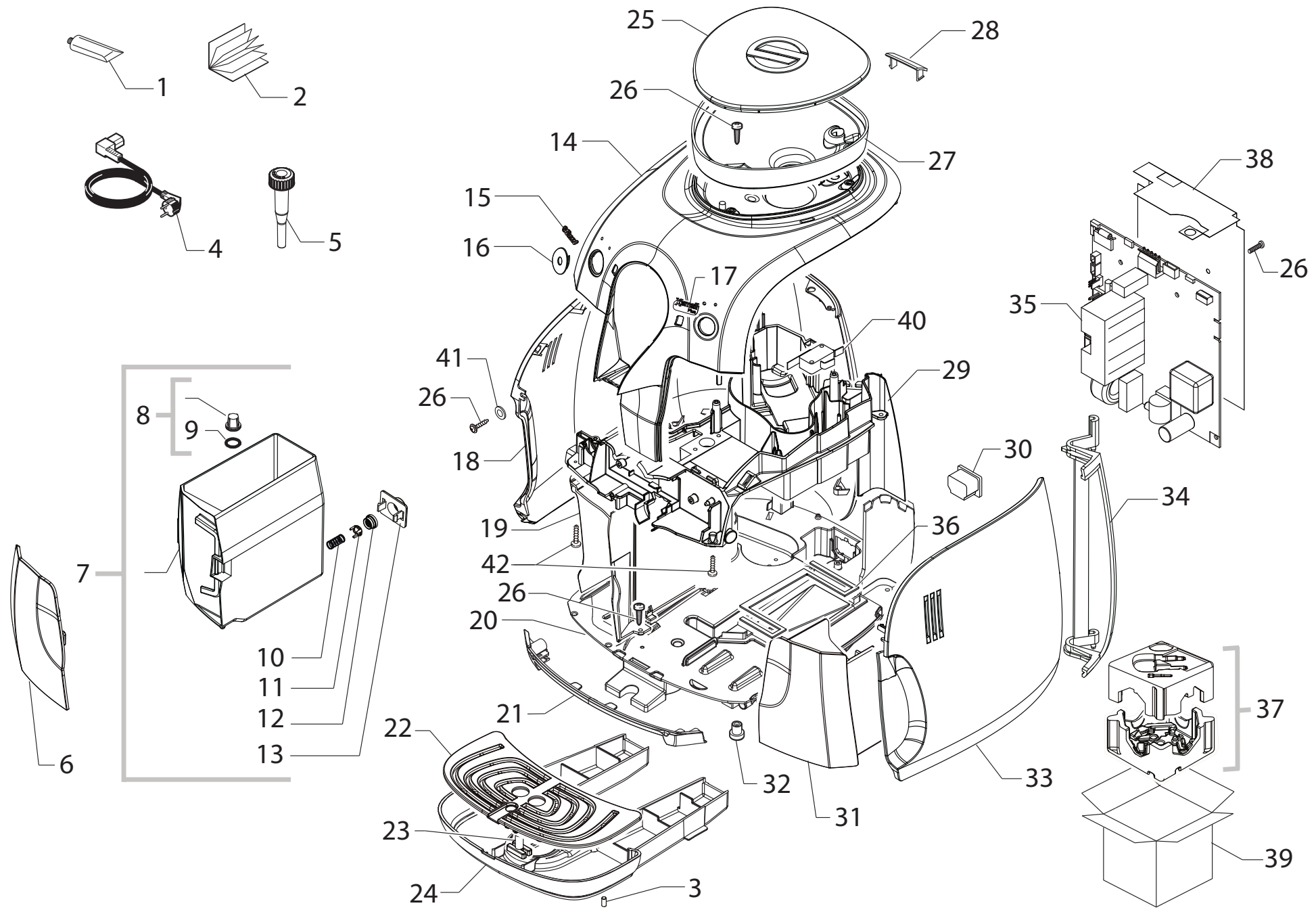

Saeco INTERNATIONAL GROUP

SUP033R

CE

Cod.10002660-61-2738-10002780
Cod.10002781-2933-34-3020-21-22

POS	CODICE	DESCRIZIONE	NOTE
01	11028379	TUBET.KLUBER TRIBOSTAR SIL 2 5GR.PSA	
02	15000994	LIBR.ISTR.SAE P0057 8L.	
	15001790	LIBRETTO ISTRUZIONI P0057 JAP	
03	12001193	PIEDINO AD.D=19,1 H=4,1 RBS-44-CR TRASP.	
		FINO MATR.9008SR40105639	
04	183911050	CAVO AL.SCHUKO 3X1 H05VV-F NERO L=1200MM	
	183930650	CAVO AL.CH 3X1 H05VV-F NER.L=1200MM	
	183921950	CAVO AL.USA SJT3 UL 16AWG NERO L=1200	
	17800019	CAVO AL.BRA.3X1 10A/V2 NER.L=1200	
	17800330	CAVO AL.BRA.3X1,5 16A/V2 NER.L=1200	
	183980650	CAVO AL.JAP.VCTF 3X2 NERO L=1200 MM	
	183940650	CAVO AL.AUSTRAL.3X1 H05VV-F NERO L=1200	
05	11003785	CHIAVE REGOLAZIONE MACINATURA P0049 NER	
06	11006331	COPERT.ANT.CONT.ACQUA P0057 ROSSO	
	11005756	COPERT.ANT.CONT.ACQUA P0057 VERN.ARGEN	
07	11006058	AS.CONTENIT.ACQUA P0057 GRI/NAT.	
08	224640200	AS.FILTRO ESTERNO X CONTENITORI ACQUA	
09	140328461	OR METRICO 0190-10 IN EPDM	
10	11003672	MOLLA CILINDRICA X VALV.CONT.ACQUA P0049	
11	11003673	INSERTO X VALV.CONTEN.ACQUA P0049 GRIGIO	
12	11003671	VALVOLA X CONTENIT.ACQUA P0049 TRASPAR.	
13	11001298	COPERCHIO X VALVOLA DUCKBILL P0049 NERO	
14	11010606	COPERT.SUP.CARC.P0057 ROS.SER.	
	11006222	COPERT.SUP.CARC.P0057 ARG.SER.	
15	11011406	PIAST.ADES.C/LOGO SAECO P0057 ARGENTO	
16	11006066	TAPPO COP.SUP.CARC.C/F.P0057 ROSSO	
	11010038	TAPPO COP.SUP.CARC.C/F.P0057 VER.ARG	
17	11022466	PIAS.AD.C/LOGO XSMALL ARG.	
18	11006068	COPERTURA LAT.SX P0057 BIANCO	
	11004141	COPERTURA LAT.SX P0057 VERN.MEZZANOTTE	
19	11007082	INSERTO FONDO CARCASSA P0057 NERO	
20	11003741	FONDO CARCASSA P0057 NERO	
		FINO MATR.9008SR40105639	
	11012695	FONDO CARCASSA V2 P0057 NERO	
		DA MATR.9008SR40105640	
21	11006100	INSERTO FRONTALE INF.P0057 ROSSO	
	11004106	INSERTO FRONTALE INF.P0057 VERN.ARGENTO	
22	11005727	GRIGLIA VASCA RECUP.ACQ.P0057 VERN.ARG.	
23	11012039	GALLEG.VASCA RECUP.ACQUA P0057 ROSSO	
24	11003735	VASCA RECUPERO ACQUA P0057 NERO	
		FINO MATR.9008SR40105639	
	11012694	VASCA RECUPERO ACQUA V2 P0057 NERO	
		DA MATR.9008SR40105640	

POS	CODE	DESCRIPTION	NOTE
01	11028379	PSA KLUBER TRIBOSTAR SIL 2 TUBE 5GR.	
02	15000994	MANUAL SAE P0057 8L.	
02	15001790	MANUAL INSTRUCTIONS P0057 JAP	
03	12001193	TRANSP.ROUND ADHESIVE FOOT RBS-44-CR	
		UP TO S/N.9008SR40105639	
04	183911050	POWER CABLE SCHUKO BLACK L=1200	
	183930650	POWER CABLE CH BLACK 3X1 H05VV-F L=1200	
	183921950	POWER CABLE SJT3 USA BLACK UL L=1200	
	17800019	BLACK POWER CABLE BRAZIL L=1200	
	17800330	BLACK POWER CABLE BRAZIL L=1200	
	183980650	POWER CABLE JAPPON VCTF BLACK L=1200 MM	
	183940650	BLACK POWER CABLE AUSTRALIA L=1200	
05	11003785	BLACK GRINDER ADJUSTMENT KEY P0049	
06	11006331	RED WATER TANK FRONT COVER P0057	
	11005756	SILVER WATER TANK FRONT COVER P0057	
07	11006058	NATURAL/GREY WATER CONTAINER P0057 ASSY.	
08	224640200	EXTERNAL FILTER FOR WATER CONTAINER ASSY	
09	140328461	EPDM OR METRIC 0190-10	
10	11003672	SPRING FOR WATER CONTAINER VALVE P0049	
11	11003673	GREY WATER CONTAINER VALVE INSERT P0049	
12	11003671	TRANSP.VALVE FOR WATER CONTAINER P0049	
13	11001298	BLACK LID FOR DUCKBILL VALVE P0049	
14	11010606	RED UPPER COVER CASING P0057 S/SCREEN	
	11006222	SILVER UPPER COVER CASING P0057 S/SCREEN	
15	11011406	ADHES.SILVER PLATE LOGO SAECO P0057	
16	11006066	RED UPPER COVER CASING CAP P0057	
	11010038	SILVER UPPER COVER CASING CAP P0057	
17	11022466	ADHES.SILVER PLATE LOGO XSMALL	
18	11006068	WHITE LEFT SIDE COVER P0057	
	11004141	MEZZANOTTE LEFT SIDE COVER P0057	
19	11007082	BLACK INSERT FOR CASING BOTTOM P0057	
20	11003741	BLACK CASING BOTTOM P0057	
		UP TO S/N.9008SR40105639	
	11012695	BLACK CASING BOTTOM V2 P0057	
		FROM S/N.9008SR40105640	
21	11006100	RED LOWER FRONT INSERT P0057	
	11004106	SILVER LOWER FRONT INSERT P0057	
22	11005727	SILVER GRATE FOR DRIP TRAY P0057	
23	11012039	RED FLOAT FOR DRIP TRAY P0057	
24	11003735	BLACK DRIP TRAY P0057	
		UP TO S/N.9008SR40105639	
	11012694	BLACK DRIP TRAY V2 P0057	
		FROM S/N.9008SR40105640	

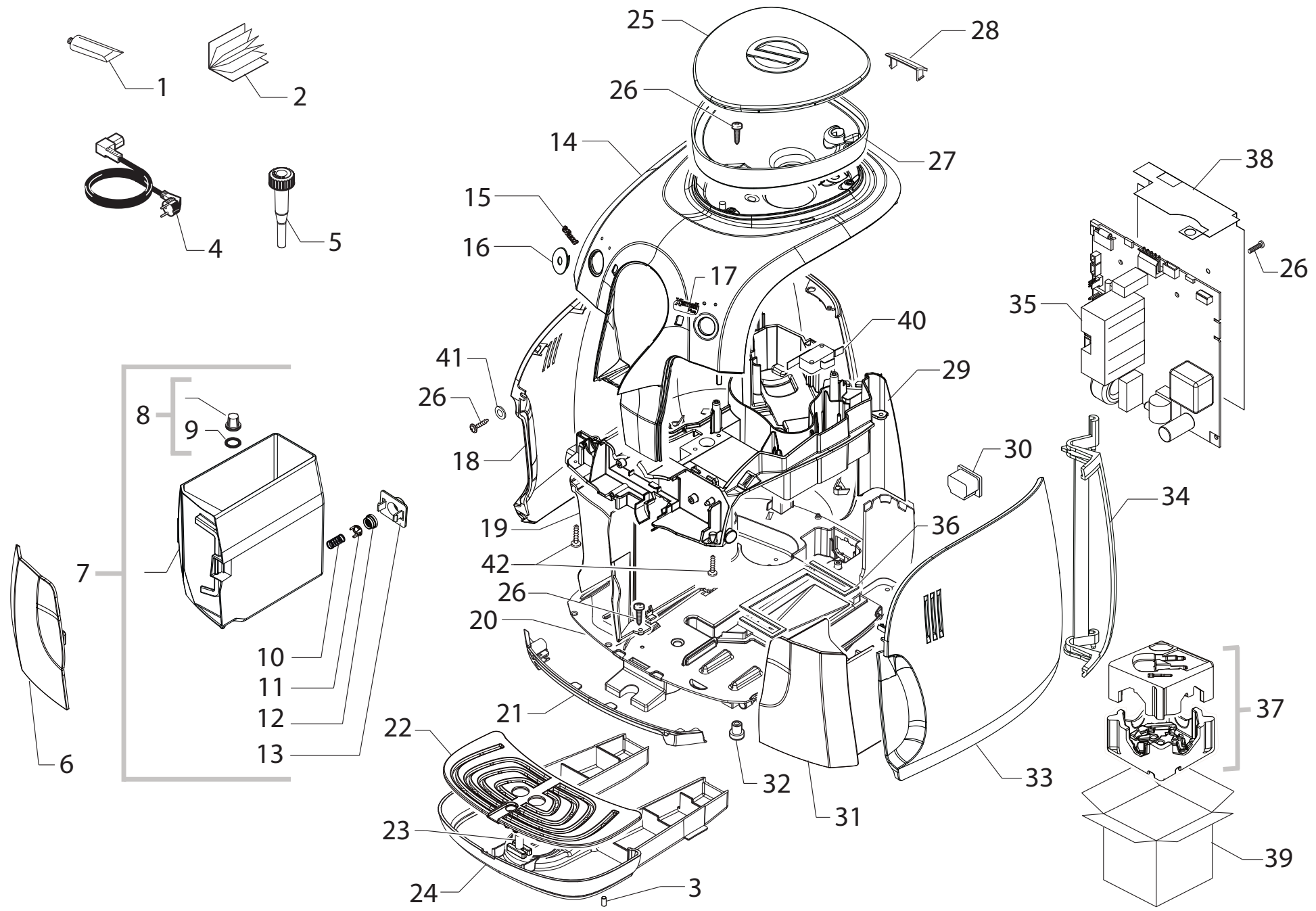

Saeco INTERNATIONAL GROUP

SUP033R

Cod.10002660-61-2738-10002780
Cod.10002781-2933-34-3020-21-22

POS	CODICE	DESCRIZIONE	NOTE
25	11004123	COPERC.CONT.CAFFE' GRANI P0057 GRI/NAT.	
26	12000450	VITE TCBR 3,5X12 PLAST.ZN-N	
27	11004125	CONTENIT.CAFFE' GRANI P0057 GRI/NAT.	
28	17000141	COP.ACCESSO INFRAROSSI P0057 TRASP.	
29	11003755	PIASTRA SUPPORTO MACINACAFFE' P0057 NERO	
30	12000280	PRESA A VASCHETTA C/SMUSSI EN 60320 C 13	
31	11006057	CASSET.RACCOGLI FONDI P0057 ROSSO	
	11004105	CASSET.RACCOGLI FONDI P0057 VERN.ARGEN.	
32	147622800	PIEDINO PIANETA CAFFE' TRASPARENTE	
33	11004130	SPORTELLO P0057 BIANCO	
	11004138	SPORTELLO P0057 VERN.MEZZANOTTE	
34	11004139	CERNIERA SPORTELLO P0057 NERO	
35	11012246	AS.CPU+SW P0057 XSMALL V1 LAC	230V
		FINO MATR.9008SR40139106	
	11011209	AS.CPU+SW P0057 XSMALL V1	230V
		DA MATR.9008SR40139107	
	11006345	AS.CPU+SW P0057 XSMALL V1	100V-120V
36	11012102	AERSTOP MONOADESIVO SP=1,6 MM P0057	
37	20000688	KIT INSERTI SCATOLA P0057 IN PS-E TYPE A	
38	11012301	PROT.SCHEDA PWR/CPU P0057 NER.	
39	13000462	SCATOLA LITOGRAFATA P0057	
40	NE05.013	MICROINTERRUTTORE	
41	128382002	ROND.PIANA DI=3,7 DE=11 SP=0,8 ZINC	
42	12001728	VITE TCBR 3,5X12 PLAST.INOX	

POS	CODE	DESCRIPTION	NOTE
25	11004123	NATUR/GREY BEAN COFF.CONTAINER LID P0057	
26	12000450	SCREW TCBR TORX 10 3,5X12 PLAST.ZN-N	
27	11004125	NATURAL/GREY BEAN CONTAINER P0057	
28	17000141	TRANSP.COVER INFRAREDS ACCESS P0057	
29	11003755	BLACK COFFEE GRINDER PLATE P0057	
30	12000280	CUP SOCKET EN 60320 C 13	
31	11006057	RED DUMP BOX P0057	
	11004105	SILVER DUMP BOX P0057	
32	147622800	TRANSPARENT LITLE FOOT	
33	11004130	WHITE DOOR P0057	
	11004138	MEZZANOTTE DOOR P0057	
34	11004139	BLACK HINGE FOR DOOR P0057	
35	11012246	CPU+SW AS.P0057 XSMALL V1 LAC	230V
		UP TO S/N.9008SR40139106	
	11011209	CPU+SW P0057 XSMALL V1 ASSY.	230V
		FROM S/N.9008SR40139107	
	11006345	CPU+SW P0057 XSMALL V1 ASSY.	100V-120V
36	11012102	ADHESIVE AERSTOP SP=1,6 MM P0057	
37	20000688	KIT TYPE "A" PS-E INSERT FOR BOX P0057	
38	11012301	BLACK PWR/CPU BOARD PROTECTION P0057	
39	13000462	DISPLAY BOX P0057	
40	NE05.013	MICROSWITCH	
41	128382002	FLAT WASH.DI=3,7 DE=11 SP=0,8 GALV.	
42	12001728	SCREW TCBR TORX 10 3,5X12 PLAST.SS	

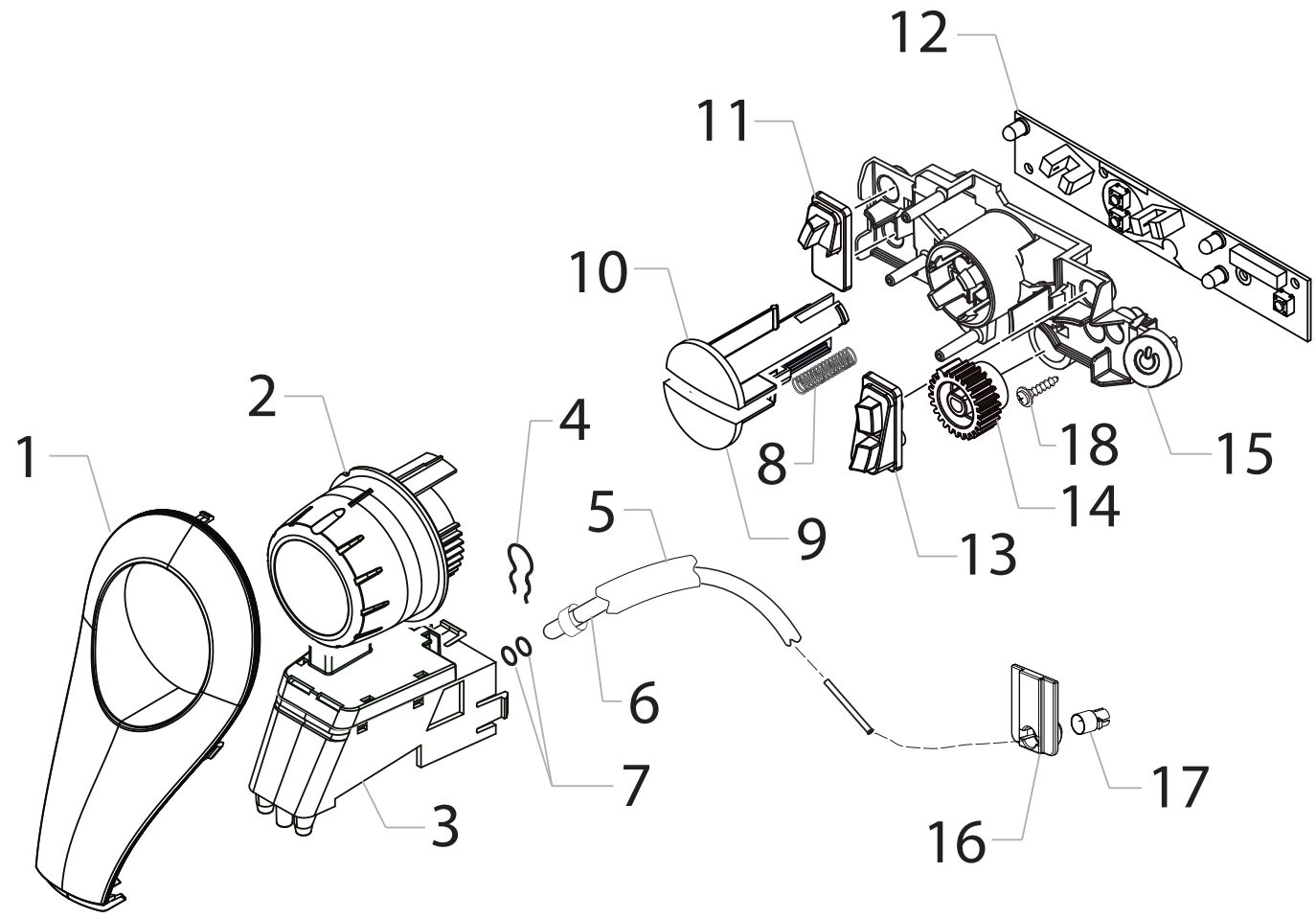

Saeco INTERNATIONAL GROUP

SUP033R

CE

Cod.10002660-61-2738-10002780
Cod.10002781-2933-34-3020-21-22

POS	CODICE	DESCRIZIONE	NOTE
01	11007081	COPERT.POMELLO COMANDI P0057 NER.SER.	
02	11012310	POMELLO COMANDI P0057 NERO SER.	
03	11011280	AS.EROGATORE CAFFE' SALD.P0057 NERO	
04	9011.144	FORCELLA X TUBO D.4	
05	149361200	TUBO SILICONE NERO 7,5X9,3	IN MATASSA
06	11004132	AS.TUBO TEFLON 2X4 L=250MM+1BOC.DIST13MM	
07	140328059	OR 2015 IN SILICONE PTFE/FDA	
08	11008956	MOLLA X SERRATURA SPORTELLO G0053 INOX	
09	11010035	TASTO CAFFE' P0057 NER.SER.TAZZA GRANDE	
10	11006064	TASTO CAFFE' P0057 NER.SER.TAZZA PICCOLA	
11	11013011	GUIDA LUCE SX P0057 PMMA TRASPARENTE	
12	11004104	SCHEDA KYB XSMALL P0057	
13	11013012	GUIDA LUCE DX P0057 PMMA TRASPARENTE	
14	11004120	INGRANAGGIO Z=26 VAPORE/ACQUA P0057 NER.	
15	11012385	TASTIERA COMANDI V2 P0057/B-C VERN.ARG.	
16	11005100	PIASTRINA X BOCCOLA TUBO TEFLON 4X2 P124	
17	11005101	BOCCOLA X TUBO TEFLON 4X2 P124	
18	12000450	VITE TCBR 3,5X12 PLAST.ZN-N	
19	17000266	BOC.INT.L=22,6MM TUBO TEFLON D=4 INOX	

POS	CODE	DESCRIPTION	NOTE
01	11007081	BLACK CONTROL KNOB COVER P0057 S/SCR.	
02	11012310	BLACK CONTROL KNOB S/SCREEN P0057	
03	11011280	BLACK COFFEE DISPENSER P0057 ASSY.	
04	9011.144	FORK FOR TUBE D.4	
05	149361200	BLACK SILICONE TUBE 7,5X9,3 IN ROLL	
06	11004132	TEFLON TUBE 2X4 L=250 MM ASSY	
07	140328059	OR 2015 IN SILICONE PTFE/FDA	
08	11008956	SS SPRING FOR LOCK DOOR G0053	
09	11010035	BLACK BUTTON BIG CUP COFFEE P0057	
10	11006064	BLACK BUTTON SMALL CUP COFFEE P0057	
11	11013011	TRANSPARENT LEFT GUIDE LIGHT P0057	
12	11004104	KEYBOARD XSMALL P0057	
13	11013012	TRANSPARENT RIGHT GUIDE LIGHT P0057	
14	11004120	BLACK STEAM/WATER GEAR Z=26 P0057	
15	11012385	SILVER TOUCH PANEL V2 P0057/B-C	
16	11005100	PLATE FOR 4X2 TEFLON TUBE P124	
17	11005101	BUSH FOR 4X2 TEFLON TUBE P124	
18	12000450	SCREW TCBR 3,5X12 PLAST.ZN-N	
19	17000266	SS.L=22,6MM INT.BUSH FOR TEFLON TUBE D4	

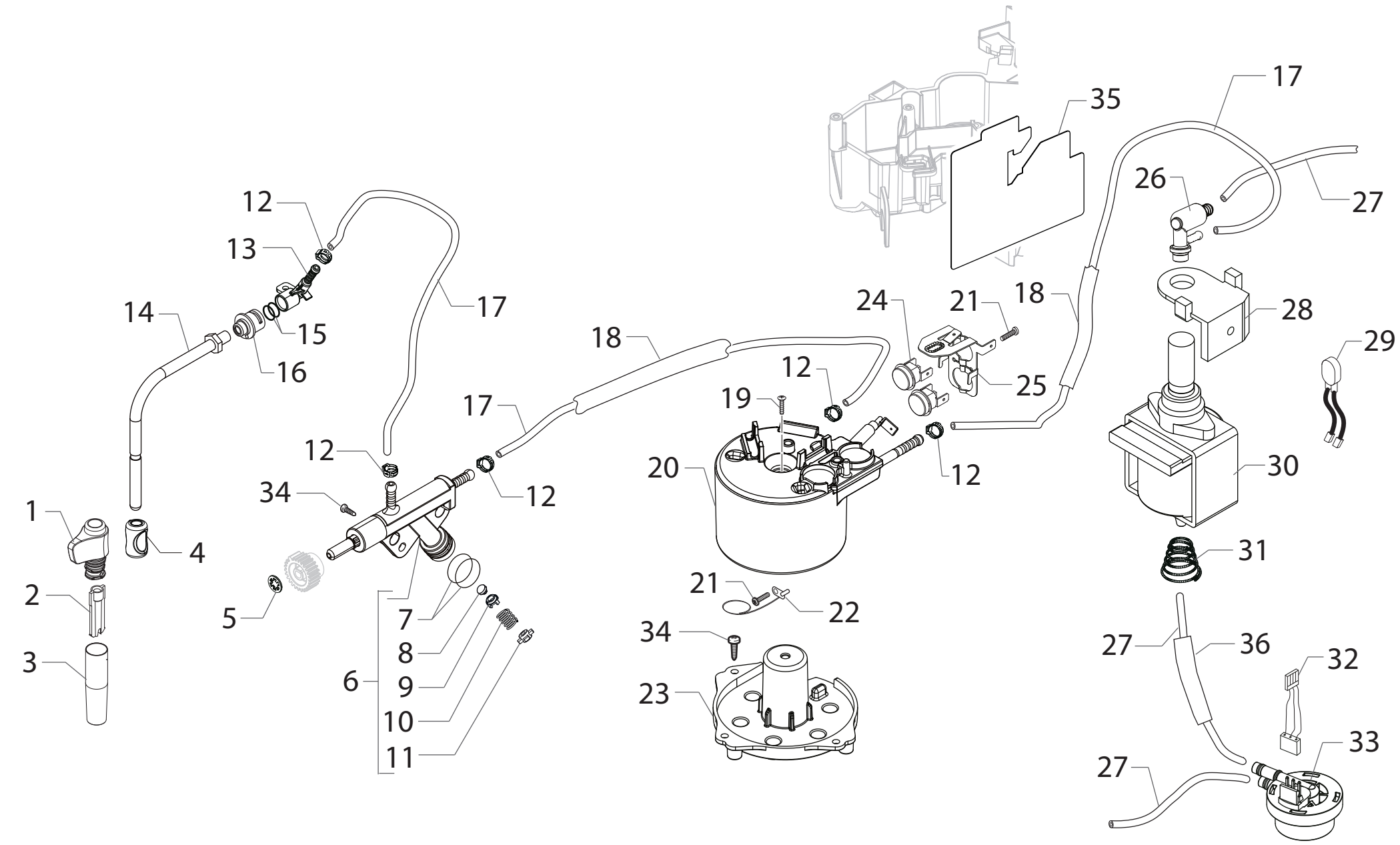

Saeco INTERNATIONAL GROUP

SUP033R

CE

Cod.10002660-61-2738-10002780
Cod.10002781-2933-34-3020-21-22

POS	CODICE	DESCRIZIONE	NOTE
01	11007194	IMPUGNATURA TUBO VAPORE G0053 NERO	
02	11001620	CANOTTO INT.PANNARELLO P0049 NERO	
03	11001769	COPERTURA PANNARELLO P0049 NERO	
04	11008991	IMPUGNATURA TUBO VAPORE P604 NERO	
05	128210600	RONDELLA ELASTICA X ALBERI D=6 MM	
06	11012381	RUB.REGOLATORE FLUSSO ACQ/VAP.V2 P0057	
07	12000893	OR METRICO 0120-20 IN EPDM	
08	11008104	VALVOLA A FUNGO REGOLAT.DI FLUSSO P0057	
09	11008105	SUPP.VALV.A FUNGO REGOL.DI FLUSSO P0057	
10	11008077	MOLLA VALVOLA REGOLAT.DI FLUSSO P0057	
11	11008106	TAPPO VALV.A FUNGO REGOL.DI FLUSSO P0057	
12	12000892	FASCETTA OETIKER D=9,5 16700004	
13	11005757	SUPPORTO TUBO VAPORE P0057	
14	11012972	AS.TUBO VAP+DADO V2 P0057 OT/CROM.TF	
15	140324461	OR ORM 0060-20 IN TERMOIL	
16	11011127	BOCCOLA TUBO VAPORE P0057 PA6 NERO	
17	16000380	TUBO SIL.RETINATO 5X8,9 REHAU	IN MATASSA
18	16000540	TUBO SILICONE 10,5X12,3 TRASP.	IN MATASSA
19	129932502	VITE TCEI 5X30 PLAST.ZN-B	
20	11011341	AS.CALD.TUB.V4	230V-1300W
	11011342	AS.CALD.TUB.V4	120V-1300W
	11011346	AS.CALD.TUB.V4	100V-1100W
21	12001715	VITE TCB M4X8 AUTOFORM.S/TEST.DENT.ZN-B	
22	190800100	SENSORE TEMPERATURA NTC UL L=280MM	
23	11003752	SUPPORTO CALDAIA P0057 NERO	
24	189428600	TERMOSTATO 175° 1NT-08L-5125	
25	11007907	MOLLA X TERMOSTATI CALD.TUBOL.V5 ACC.	
26	11004689	AS.VALV.SIC.16-18 BAR OT/TEA	
27	JS01.022	TUBO SILICONE 5X10 60 SHORE	IN MATASSA
28	149205850	SUPPORTO POMPA TYP ULKA C/SMUSSO NERO	
29	11009747	AS.CONNETTORE 2POLI POMPA P0057 UL	
30	12000140	POMPA ULKA EP5/S GW	230V-50HZ
	12000142	POMPA ULKA EAP5/S	120V-60HZ
	12000130	POMPA ULKA EP5/S GW	100V-50/60HZ
	12000167	POMPA ULKA EP5/S GW	240V-50HZ
	12000182	POMPA ULKA EP5/S GW	220V-60HZ
31	11004220	MOLLA SUPPORTO POMPA P0057	
32	11005948	AS.CONNETTORE 3 POLI TURBINA P0057	
33	NV99.099	AS.TURBINA D=1,2 932-8521/00	
34	12000450	VITE TCBR 3,5X12 PLAST.ZN-N	
35	11012323	PROT.ISOL.SP=0,55 SCHEDA PWR P0057 NOMEX	
36	11027130	TUBO FIBRE VETRO/SILIC.D=12 L=130MM ROS	

POS	CODE	DESCRIPTION	NOTE
01	11007194	BLACK STEAM TUBE HANDGRIP G0053	
02	11001620	BLACK PANNARELLO INTERNAL TUBE P0049	
03	11001769	BLACK PANNARELLO COVER P0049	
04	11008991	BLACK STEAM TUBE HANDGRIP P604	
05	128210600	ELASTIC WASHER FOR SHAFT D=6MM	
06	11012381	FLOW SELECTOR FAUCET V2 P0057	
07	12000893	OR METRIC 0120-20 IN EPDM	
08	11008104	MUSHROOM VALVE FOR FLOW SELECTOR P0057	
09	11008105	SUPPORT VALVE FOR FLOW SELECTOR P0057	
10	11008077	SPRING FOR VALVE FLOW SELECTOR P0057	
11	11008106	VALVE CAP FOR FLOW SELECTOR P0057	
12	12000892	OETIKER CLAMP D=9,5 16700004	
13	11005757	STEAM TUBE SUPPORT P0057	
14	11012972	TF/CHROM.STEAM TUBE V2 P0057 ASSY.	
15	140324461	OR ORM 0060-20 IN TERMOIL	
16	11011127	BLACK PA6 BUSH FOR STEAM TUBE P0057	
17	16000380	5X8,9 SILICONE TUBE	IN ROLL
18	16000540	TRANSPAR.10,5X12,3 SILICONE TUBE	IN ROLL
19	129932502	SCREW TCEI 5X30 PLAST.ZN-B	
20	11011341	V4 TUB.BOILER ASSY.	230V-1300W
	11011342	V4 TUB.BOILER ASSY.	120V-1300W
	11011346	V4 TUB.BOILER ASSY.	100V-1100W
21	12001715	SCREW TCB TORX 20 M4X8 AUTOFORMING ZN-B	
22	190800100	TEMPERATURE SENSOR NTC UL L=280MM	
23	11003752	BLACK BOILER SUPPORT P0057	
24	189428600	THERMOSTAT 175° 1NT-08L-5125	
25	11007907	THERMOSTATES SPRING FOR BOILER	
26	11004689	AS.VALV.SIC.16-18 BAR OT/TEA	
27	JS01.022	SILICONE TUBE 5X10 60 SHORE	IN ROLL
28	149205850	BLACK PUMP SUPPORT TYPE ULKA	
29	11009747	2POLES CONNECTOR PUMP P0057 UL	
30	12000140	ULKA PUMP EP5/S GW	230V-50HZ
	12000142	ULKA PUMP EAP5/S	120V-60HZ
	12000130	ULKA PUMP EP5/S GW	100V-50/60HZ
	12000167	ULKA PUMP EP5/S GW	240V-50HZ
	12000182	POMPA ULKA EP5/S GW	220V-60HZ
31	11004220	PUMP SUPPORT SPRING P0057	
32	11005948	3POLES CONNECTOR FLOWMETER P0057	
33	NV99.099	TURBINE D=1,2 932-8521/00 ASSY.	
34	12000450	SCREW TCBR TORX 10 3,5X12 PLAST.ZN-N	
35	11012323	NOMEX PROTECTION FOR POWER BOAR P0057	
36	11027130	RED GLASS FIBRES/SILIC.TUBE D=12 L=130MM	

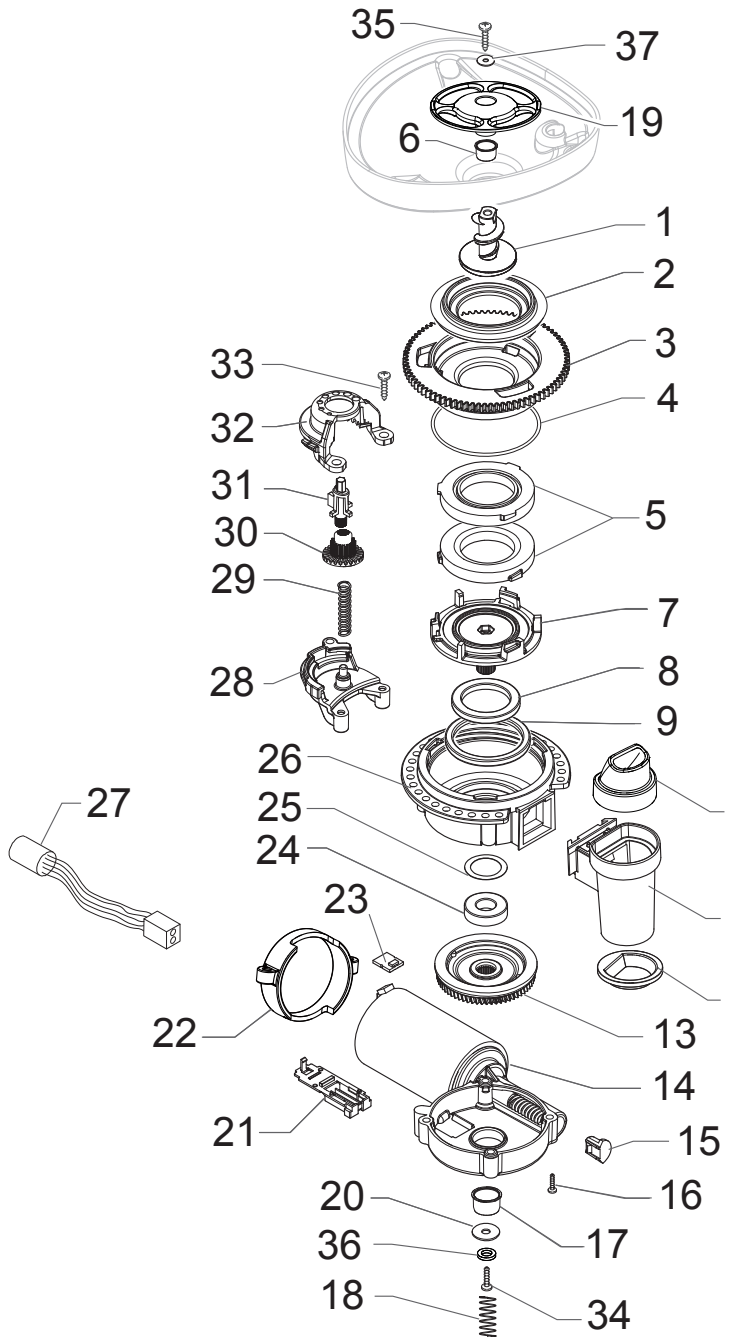

Saeco INTERNATIONAL GROUP

SUP033R

CE

Cod.10002660-61-2738-10002780
Cod.10002781-2933-34-3020-21-22

POS	CODICE	DESCRIZIONE	NOTE
01	11010031	VITE DI INCREMENTO CORTA MC ZAMA/TEA	
02	145857062	GUARNIZIONE MACINACAFFE' P119 SILIC.	
03	149198250	SUPPORTO SUP.MACINA MACINACAFFE V3 NERO	
04	140328960	OR METRICO 0530-15 IN NBR FDA	
05	146520100	MACINA 48X28 IN CERAMICA	
06	11012466	BOCC.PROT.DITO CONT.CAFF.GRANI P0057 OTT	
07	149198350	SUPPORTO INF.MACINA MACINACAFFE V3 NERO	
08	123030300	CUSCINETTO ASSIALE EKKO 342.35252	
09	140360500	ANELLO IN FELTRO DE=45,4 DI=39,4H=4	
10	11006226	CONVOGLIAT.CONDENSA GRUP.CAF.P0057 NER	
11	11026355	AS.CONVOGL.USCITA CAF.MAC.V4 SMART1 NER.	
12	145854462	GUARNIZ.INF.CONT.CAFFE' MACINATO SMART1	
13	226000300	AS.ING.SX Z=38 X MOVIM.MACINA C/CALAMITA	
14	11000513	AS.MOTORE MC/V3.1 MOD=1,25 SX DOMEL	230V
	11000511	AS.MOTORE MC/V3.1 MOD=1,25 SX	120V
	11000512	AS.MOTORE MC/V3.1 MOD=1,25 SX	100V
15	149214800	TAPPO CENTRAG.VITE S/FINE MOD=1,25 MC/V3	
16	129661702	VITE TCB 3,5X30 PLAST.ZN-B	
17	11002873	BOCCOL.A ISOLANTE X MOTORE MC P124 NERA	
18	11000597	MOLLA DI SUPPORTO MOTORE MC P124 ACC.	
19	11012237	PROTEZ.DITO CONT.CAFF.GRANI P0057 NERO	
20	128381902	RONDEL.PIANA DI=4,3 DE=14 SP=1,5 AC/ZINC	
21	149199050	SUPPORTO SENSORE TERMICO X MOTORE MC	
22	11000194	SUPPORTO MOTORE MACINACAFFE' P124 NERO	
23	181540900	BAS.ELET.C/SENSORE HAL 506 SF-K C/CONNET	
24	123030200	CUSCINETTO RADIALE 61900.2RS1	
25	128381800	RONDELLA DI BILANCIAMENTO 21,8X14X0,25	
26	142905450	CORPO SUP.C/USCITA CAF.MACINATO MC NERO	
27	11008871	AS.CONNET.3POLI SENSORE/MC S0053 UL	
28	11002613	SUPPOR.INF.INGR.REGOL.MACINAT.P124 NERO	
29	11002572	MOLLA REGOLAZIONE MACINACAFFE' P124 ACC.	
30	11003784	INGRAN.Z=14-24 REGOL.MACIN.CAF.P0049 NER	
31	11003446	INSERTO X REGOLAZIONE MACINAT.P0049 NERO	
32	11002508	SUPPOR.SUP.INGR.REGOL.MACINAT.P124 NERO	
33	129914002	VITE TCB 3,5X16 PLAST.ZN-B	
34	129574802	VITE TCB M4X30 ZN-B	
35	U043.004	VITE TCBC M4,0X16 UNI 7687 ZNP	
36	128310402	ROSETTA UNI 8842 A4 ZINCATA	
37	128140302	ROSETTA 4,3X9 UNI 6592 ZNP	
	11006059	AS.GEN.MOTORE MACINACAF.P0057 STD	230V
	11012319	AS.GEN.MOTORE MACINACAF.P0057 ITA	230V
	11013028	AS.GEN.MOTORE MACINACAF.P0057	120V
	11013029	AS.GEN.MOTORE MACINACAF.P0057	100V

POS	CODE	DESCRIPTION	NOTE
01	11010031	TEA/ZAMA INCREASE SCREW GRINDER	
02	145857062	COFFEE GRINDER SEAL P119	
03	149198250	UPPER GRINDER SUPPORT COFFEEGRINDER	
04	140328960	NBR FDA OR METRIC 0530-15	
05	146520100	BAKED CLAY GRINDER 48X28	
06	11012466	BRASS BUSH BEAN CONT.FINGER PROT.P0057	
07	149198350	LOWER GRINDER SUPPORT COFFEEGRINDER	
08	123030300	AXIAL BEARING EKKO 342.35252	
09	140360500	FELT RING 45,4X39,4X4	
10	11006226	BLACK CONDENSE CONVEYOR P0057	
11	11026355	BLK GROUND COFF.OUTLET CONVEYOR V4 ASSY.	
12	145854462	GROUND COFFEE CONT.SEAL LOWER SMART1	
13	226000300	GEAR SX Z=38 FOR GRINDER MOTION ASSY.	
14	11000513	MOTOR COFFEEGRINDER/V3.1 ASSY	230V
	11000511	MOTOR COFFEEGRINDER/V3.1 ASSY	120V
	11000512	MOTOR COFFEEGRINDER/V3.1 ASSY	100V
15	149214800	CAP FOR WORM SCREW MC/V3 CENTRING	
16	129661702	SCREW TCB TORX 3,5X30 PLAST.ZN-B	
17	11002873	INSULATOR BUSH FOR GRINDER MOTOR P124	
18	11000597	COFFEE GRINDER SUPPORT SPRING P124	
19	11012237	BLACK BEAN CONTAIN.FINGER PROTECT.P0057	
20	128381902	GALVAN.FLAT WASH.DI=4,3 DE=14 SP=1,5	
21	149199050	SENSOR SUPPORT FOR COFF.GRIND.MOTOR	
22	11000194	BLACK GRINDER MOTOR SUPPORT P124	
23	181540900	ELECTRONIC BOARD WITH SENSOR HAL506	
24	123030200	RADIAL BEARING 61900.2RS1	
25	128381800	CRINKLE WASHER 21,8X15,8X0,2	
26	142905450	UPPER BODY WITH COFFE.GROUND OUTLET	
27	11008871	3 POLES CONNECTOR MC SENSOR S0053 UL	
28	11002613	LOWER GEAR SUPPORT COFFEEGRINDER P124	
29	11002572	GRINDER REGULATION SPRING P124	
30	11003784	COFFEE GRINDING ADJUSTMENT GEAR P0049	
31	11003446	BLACK INSERT FOR COFFEE GRINDER P0049	
32	11002508	UPPER GEAR SUPPORT COFFEEGRINDER P124	
33	129914002	SCREW TCB TORX 10 3,5X16 PLAST.ZN-B	
34	129574802	SCREW TCB TORX 20 M4X30 ZN-B	
35	U043.004	SCREW TCBC M4,0X16 UNI 7687 GALV.	
36	128310402	GALV.WASHER UNI 8842 A4	
37	128140302	WASHER 4,3X9 UNI 6592 ZNP	
	11006059	GENERAL MOTOR MC P0057 STD ASSY.	230V
	11012319	GENERAL MOTOR MC P0057 ITA ASSY.	230V
	11013028	GENERAL MOTOR MC P0057 ASSY.	120V
	11013029	GENERAL MOTOR MC P0057 ASSY.	100V

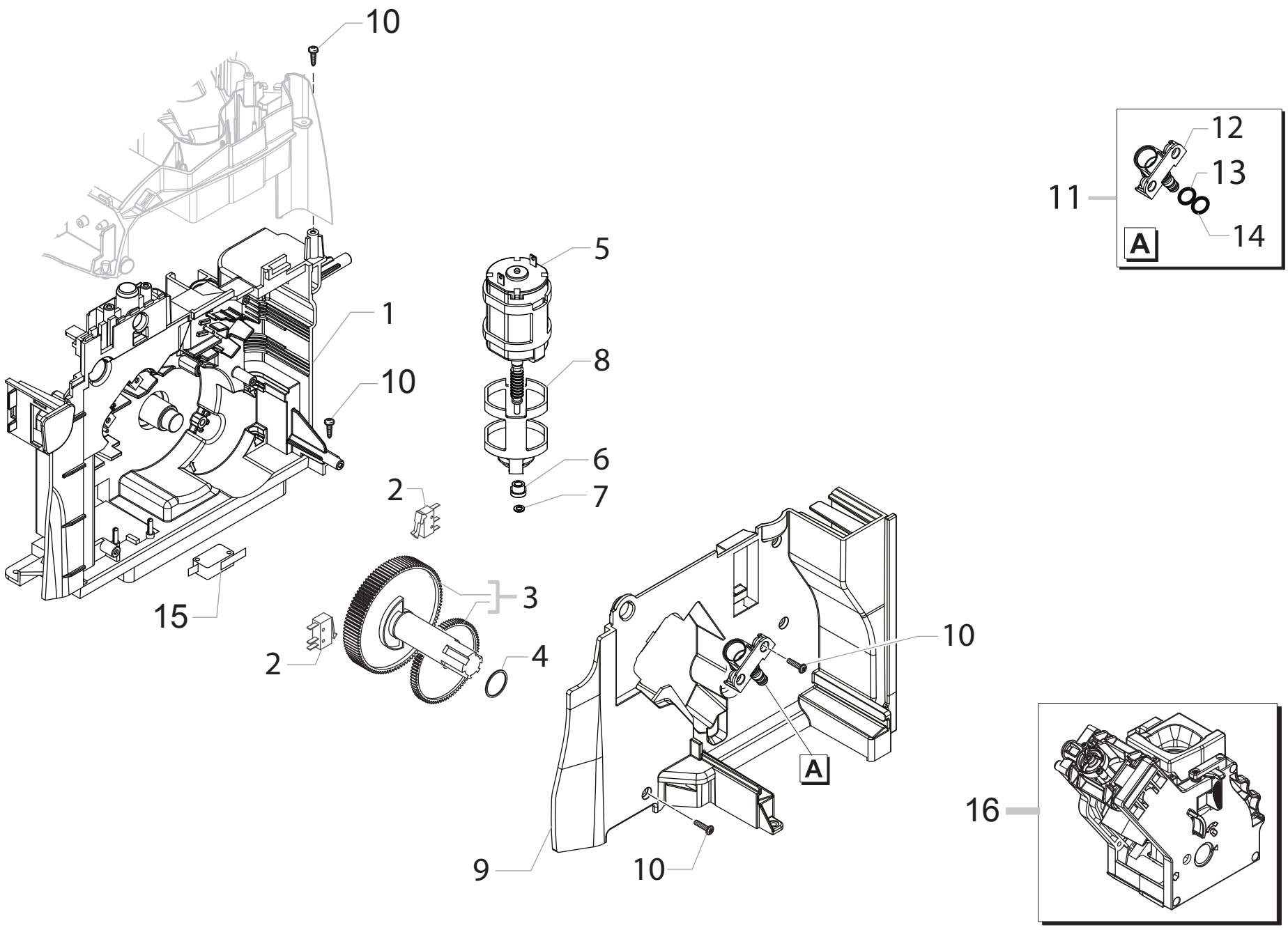

Saeco INTERNATIONAL GROUP

SUP033R

CE

Cod.10002660-61-2738-10002780
Cod.10002781-2933-34-3020-21-22

POS	CODICE	DESCRIZIONE	NOTE
01	17000366	AS.PIAS.MONTAG.MOTORID.XSMC NER.	
02	NE05.038	MICROINTERRUTTORE	
03	20000900	KIT RICAMBI INGRANAGGI MOTORIDUTTORE V2	
04	9161.132	RONDELLA MYLAR X MOTORIDUTTORE	
05	11003037	AS.MOTORE X MOTORIDUTTORE C/CONDENS.	
06	9121.046	BOCCOLA SINTERIZZATA X MOTORE	
07	148380200	RONDELLA TELA BAKELIZZATA D=5,5	
08	9121.044	ANTIVIBRANTE X MOTORE	
09	11003754	COPERTURA PIASTRA MONTAGGIO P0057 NER.	
10	12001728	VITE TCBR 3,5X12 PLAST.INOX	
11	11013531	AS.PERNO RUB.REGOL.FLUS.ACQ/VAP.V2 P0057	
12	11013530	PERNO RUB.REGOL.FLUSSO ACQ/VAP.V2 P0057	
13	NM01.035	OR ORM 0090-20 SILICONE	
14	NM01.057	OR ORM 0050-20 SILICONE	
15	NE05.013	MICROINTERRUTTORE	
16	11012382	GRUPPO CAFFE' 8GR.5BAR S0053 NERO **VEDI COD. ESPLOSO E90067** **PAGINA SUCCESSIVA**	

POS	CODE	DESCRIPTION	NOTE
01	17000366	BLK RATIOMOTOR MOUNTING PLATE XSMC ASSY.	
02	NE05.038	MICROSWITCH	
03	20000900	SPARES KIT GEARS FOR RATIOMOTOR V2	
04	9161.132	MYLAR WASHER FOR RATIOMOTOR	
05	11003037	MOTOR FOR RATIOMOTOR ASSY.	
06	9121.046	SINTERED BUSH FOR MOTOR	
07	148380200	WASHER BAKELIZZATE D=5,5	
08	9121.044	ANTIVIBRATION FOR MOTOR	
09	11003754	BLACK COVER FOR MOUNTING PLATE P0057	
10	12001728	SCREW TCBR TORX 10 3,5X12 PLAST.SS	
11	11013531	PIN FOR FLOW SELECTOR FAUCET P0057 ASSY.	
12	11013530	V2 PIN FOR FLOW SELECTOR FAUCET P0057	
13	NM01.035	OR ORM 0090-20 SILICONE	
14	NM01.057	OR ORM 0050-20 SILICONE	
15	NE05.013	MICROSWITCH	
16	11012382	BLACK BREW UNIT 8GR.5BAR S0053 **SEE COD. ESPLOSO E90067** **NEXT PAGE**	

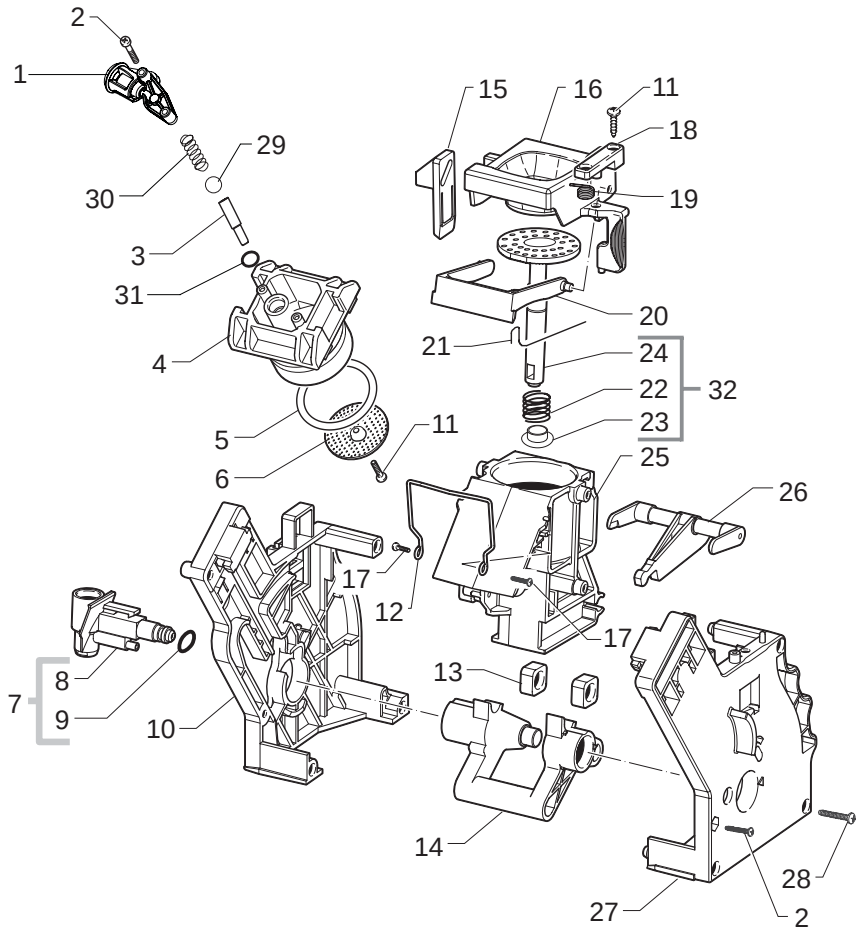

Saeco INTERNATIONAL GROUP

SUP031-033-037

Cod. 11012382

POS	CODE	DESCRIPTION	NOTE
01	11009362	BLACK COFFEE OUTLET SLEEVE S0053 ASSY.	
02	12000550	SCREW TCB TORX 10 3X25 PLAST.SS	
03	11009276	TUBE FOR COUNTER PISTON BREW UNIT S0053	
04	11001840	BLACK COUNTER PISTON BREW UNIT 8GR.P124	
05	NM01.044	OR ORM 0320-40 SILICONE PTFE/FDA	
06	9161.268	PERCOLATOR DE=35,8 ELFO	
07	20000440	BLACK SPARE SLEEVE UNIT	
08	9161.064.050	BLACK WATER INLET SLEEVE BREW UNIT	
09	NM02.007	OR 2025 TERMOIL	
10	9161.375.050	BLACK REAR PLATE FOR BREW UNIT SMART	
11	12000895	SCREW TSP TORX 10 3X10 PLAST.SS	
12	11001556	SPRING H=49 FOR COFFEE BREW UNIT SMART	
13	9161.094.150	GREY DRILLED BLOCK BREW UNIT	
14	9161.066.050	ELBOW SHAFT FOR UNIT BLACK	
15	9161.373.050	BLACK COUPLING PLATE BREW UNIT SMART	
16	149261350	BLACK HOPPER DOSER BREW UNIT SMART1	
17	129912521	SCREW TCBR TORX 10 3,5X14 PLAST.SS	
18	9161.374.050	BLACK HOPPER BLOCKING PLATE UNIT SMART	
19	9161.378	SPRING HOPPER SMART BREW UNIT	
20	11004161	BLACK SCRAPER FOR COFFEE UNIT	
21	9161.046	SPRING FOR UNIT SCRAPER	
22	9161.198	PISTON SPRING BREW UNIT M5000	
23	9161.191	NEUTRAL PISTON BUSH BREW UNIT M5000	
24	11003077	BLACK INTEGRAL PISTON UNIT P124 8GR.ASS	
25	11003075	BLACK COFFEE CONTAINER BREW UNIT P124	WITH PART. N° 12
26	11003078	BLACK CONNECTING ROD FOR UNIT P124 8GR.	
27	11005920	BLACK FRONT PLATE BREW UNIT SMART S.SCR.	
28	12000897	SCREW TCB TORX 10 3,5X20 PLAST.SS	
29	9991.168	GLASS SPHERE D.5MM	
30	11012095	SPRING FOR CONTERPISTON UNIT S0053	
31	140328761	OR METRIC 0060-15 IN TERMOIL	
32	11023086	BLK 8GR.BREW UNIT NTEGR.PISTON GEN.ASSY.	
	11012382	BLACK BREW UNIT 8 GR.5 BAR S0053	

POS	CODE	DESCRIPTION	NOTE

Saeco INTERNATIONAL GROUP

BLACK BREW UNIT 8 GR.5 BAR